Walraven RapidStrut® Slide Nut MS (zp)

(H2411)

for quick connection of clamps and threaded rods

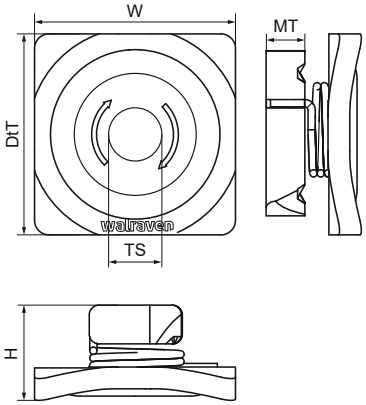

Features & benefits

- slide nut with washer and metal spring
- ready-to-use pre-assembled for a quick fixing, and retains assembly in place before final tightening
- solid washer for strong connection
- robust since completely made from metal
- material: steel 1.0332
- zinc plated ISO 2081-Fe/Zn5/A (EN ISO 2081:2008)
- Tested values in combination with Walraven RapidStrut® Rail 41x41x2.5mm.

Product Number	VVS Number	For Rail Type	Thread Size	Material Thickness	Torque Moment For Installation	Maximum Allowed Load Fax	Maximum Allowed Load Faz	Total Height	Total Width	Total Depth
Reference letter			*TS*	*MT*	*T inst.*	*Fa,x*	*Fa,z*	*H*	*W*	*DtT*
Unit description				*mm*	*Nm*	*N*	*N*	*mm*	*mm*	*mm*
66513106		41x21, 41x41, 41x51, 41x62, 41x82	M6	8.00	25	950	2,660	20	43	43
66513108	018044508	41x21, 41x41, 41x51, 41x62, 41x82	M8	8.00	25	1,450	4,450	20	43	43
66513110	018044510	41x21, 41x41, 41x51, 41x62, 41x82	M10	8.00	30	1,810	5,000	20	43	43
66513112	018044512	41x21, 41x41, 41x51, 41x62, 41x82	M12	10.00	40	2,790	5,000	20	43	43