Walraven BISMAT® 2000 'S' (M8/M10) 2-screw

(A0536)

for steam pipes

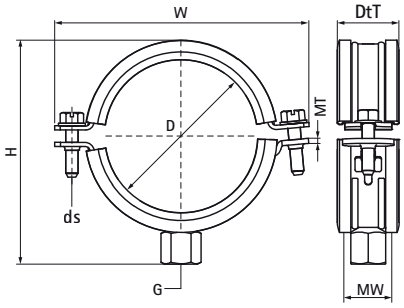

Features & benefits

- two-screw clamp
- with Walraven BISMAT® quick locking system
- clamp easy to close with one hand
- material: steel
- zinc plated
- sound insulating lining according DIN 4109
- tested for fire safety
- heat resistant up to 210°C

EPD

Product Number	DN	Pipe Diameter Imperial	Connection Thread	Total Height	Total Width	Total Depth	Material Width	Material Thickness	Screw Size	Maximum Allowed Load Faz	Approvals
Reference letter	*D*	*D*	*G*	*H*	*W*	*DtT*	*MW*	*MT*	*ds*	*Fa,z*	
Unit description		*"*		*mm*	*mm*	*mm*	*mm*	*mm*		*N*	
3404080	DN 65	2½	M8/M10	109	126	30	23	2.00	M6	930	ITB (KOT), EPD
3404091	DN 80	3	M8/M10	121	137	30	25	2.50	M6	930	ITB (KOT), EPD
3404114	DN 100	4	M8/M10	141	160	30	25	2.50	M6	930	ITB (KOT), EPD
3404141	DN 125	5	M8/M10	170	189	30	25	2.50	M6	930	ITB (KOT), EPD
3404168	DN 150	6	M10	198	233	30	25	3.00	M8	930	ITB (KOT), EPD