Walraven Heavy Duty Clamp HD500 (M8/10) (Black)

(B1040)

for steel and stainless steel pipes, including fire mains

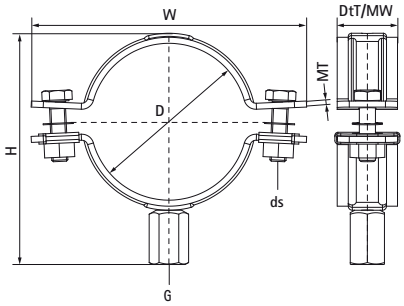

Features & benefits

- two-part clamp with two locking bolts
- up to and including 5": locking nut is captive, hidden in plastic holder
- heavy design
- bolts secured with anti-loss washers
- with 360° CO_2 welded connection nut
- suitable for fire mains (DIN1988-600)
- with M8/10 connection for higher flexibility
- can be used with stainless steel pipe; the epoxy powder coating prevents contact corrosion between clamp and pipe
- material: steel
- surface protection:
- black (RAL 9005) epoxy powder coating (60 µm)
- product is part of the Walraven BIS UltraProtect® 1000 system
- suitable for in- and outdoor applications
- stands min. 1,000 hours salt spray test (max. 5% red rust) according to ISO 9227

VdS EPD

Product Number	DN	Pipe Diameter Imperial	Connection Thread	Total Height	Total Width	Total Depth	Material Width	Material Thickness	Screw Size	Maximum Allowed Load Faz	Approvals
Reference letter	*D*	*D*	*G*	*H*	*W*	*DtT*	*MW*	*MT*	*ds*	*Fa,z*	
Unit description		*"*		*mm*	*mm*	*mm*	*mm*	*mm*		*N*	
3303B016	-	-	M8/M10	43	72	32	30	2.50	M8	2,100	ITB (KOT), EPD
3303B026	-	-	M8/M10	53	82	32	30	2.50	M8	2,100	ITB (KOT), EPD
3303B030	DN 20	¾	M8/M10	57	85	32	30	2.50	M8	2,100	VdS, ITB (KOT), EPD
3303B036	DN 25	1	M8/M10	63	91	32	30	2.50	M8	2,100	VdS, ITB (KOT), EPD
3303B042	-	-	M8/M10	69	98	32	30	2.50	M8	2,100	VdS, ITB (KOT), EPD
3303B052	DN 40	1½	M8/M10	79	109	32	30	2.50	M8	2,100	VdS, ITB (KOT), EPD
3303B065	DN 50	2	M8/M10	92	121	32	30	2.50	M8	2,100	VdS, ITB (KOT), EPD
3303B023	DN 15	½	M8/M10	50	79	32	30	2.50	M8	2,100	ITB (KOT)
3303B058	-	-	M8/M10	85	114	32	30	2.50	M8	2,100	VdS, ITB (KOT)