Walraven Sprinkler Clamp TA41

(B1215)

for sprinkler pipes

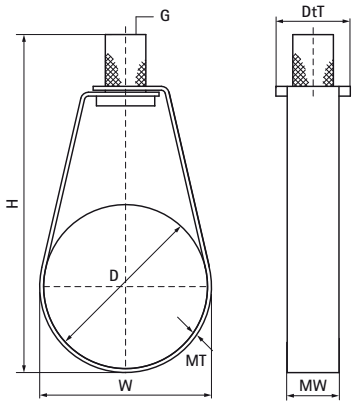

Features & benefits

- one-part clamp
- for sprinkler pipes up to 8" (221 mm)
- with knurled nut for fixing to stud bolt or threaded rod
- material: steel
- clamp: pre-galvanized; nut: zinc plated
- with FM approval - certificate number 3024336
- UL listed - certificate number VFXT.EX9140

FM APPROVED UL LISTED EPD

Product Number	DN	Pipe Diameter Imperial	Connection Thread	Material Width	Material Thickness	Total Height	Total Width	Total Depth	Approvals	Maximum Allowed Load Faz
Reference letter	*D*	*D*	*G*	*MW*	*MT*	*H*	*W*	*DtT*		*Fa,z*
Unit description		*"*		*mm*	*mm*	*mm*	*mm*	*mm*		*N*
4535021	DN 15	½	M10	16	1.00	87	27	23	FM, UL, ITB (KOT), EPD	1,500
4535027	DN 20	¾	M10	16	1.00	85	30	23	FM, UL, ITB (KOT), EPD	1,500
4535034	DN 25	1	M10	16	1.00	91	36	23	FM, UL, ITB (KOT), EPD	1,500
4535042	DN 32	1¼	M10	16	1.00	100	45	23	FM, UL, ITB (KOT), EPD	1,500
4535048	DN 40	1½	M10	16	1.00	102	51	23	FM, UL, ITB (KOT), EPD	1,500
4535060	DN 50	2	M10	16	1.00	118	64	23	FM, UL, ITB (KOT), EPD	1,500
4535076	DN 65	2½	M10	22	2.00	133	79	22	FM, UL, ITB (KOT), EPD	4,500
4535089	DN 80	3	M10	22	2.00	147	95	22	FM, UL, ITB (KOT), EPD	4,500
4535114	DN 100	4	M10	22	2.00	180	120	22	FM, UL, ITB (KOT), EPD	4,500
4535140	DN 125	5	M12	27	3.00	213	150	35	FM, UL, ITB (KOT)	5,200
4535168	DN 150	6	M12	27	3.00	244	177	35	FM, UL, ITB (KOT)	5,200
4535219	DN 200	8	M12	27	3.00	314	228	35	FM, UL, ITB (KOT)	5,200