# Walraven starQuick® Clamp – M6 (Grey)

*(C0515)*

for securing conduits and pipes to walls, floors, or ceilings

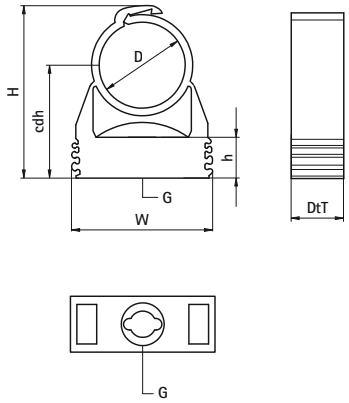


## Features & benefits

- one-part clamp
- clamp closes by applying pressure to the pipe
- for outdoor use and installations in swimming pool environments, chemical factories, zinc factories, etc.
- due to a patented profile it is possible to tack several clamps to each other
- with pre-assembled connection nut M6
- material: modified PA6 (polyamide), grey (according to RAL 7035)
- resistant to UV, ageing, oil and petrol
- no corrosion, recyclable, halogen free
- temperature resistance from approx. -40 °C to approx. +90 °C (constant); short to approx. +130 °C

| Product Number | Total Height | Total Width | Total Depth | Clamp Center Distance Height | Height | Connection Thread | Maximum Allowed Load Faz | Breaking Load Fbz |
|---|---|---|---|---|---|---|---|---|
| *Reference letter* | *H* | *W* | *DtT* | *cdh* | *h* | *G* | *Fa,z* | *Fb,z* |
| *Unit description* | *mm* | *mm* | *mm* | *mm* | *mm* | | *N* | *N* |
| 0854615 | 40 | 29 | 17 | 25 | 10.6 | M6 | 200 | 600 |
| 0854618 | 44 | 29 | 17 | 27 | 10.6 | M6 | 230 | 700 |
| 0854622 | 48 | 29 | 17 | 28 | 10.6 | M6 | 270 | 800 |
| 0854628 | 50 | 40 | 18 | 32 | 10.6 | M6 | 280 | 850 |
| 0854631 | 61 | 40 | 17 | 36 | 10.6 | M6 | 300 | 900 |
| 0854635 | 65 | 43 | 17 | 37 | 10.6 | M6 | 330 | 1,000 |
| 0854638 | 74 | 47 | 17 | 44 | 12.1 | M6 | 330 | 1,000 |
| 0854642 | 78 | 52 | 17 | 44 | 12.1 | M6 | 330 | 1,000 |
| 0854654 | 91 | 63 | 17 | 50 | 12.1 | M6 | 330 | 1,000 |
| 0854612 | 40 | 29 | 17 | 25 | 10.6 | M6 | 180 | 550 |