Walraven BISOFIX® E19

(D0314)

for insulated pipes

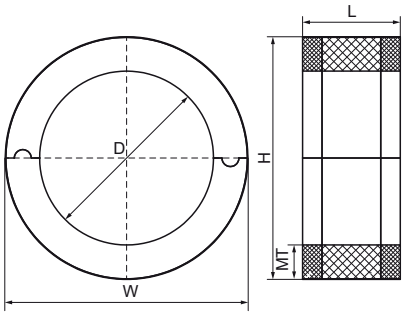

Features & benefits

- for combination with elastomeric foam insulation
- vapourproof glueable with pipe insulation
- does not contain CFC, HCFC, formaldehyde or cadmium
- fire class B2
- PIR density for D <80mm = 80kg/m^3
- PIR density for D >80mm = 120kg/m^3
- temperature range -45 °C - +105 °C

Product Number	DN	Total Height	Total Width	Total Length	Material Thickness	Maximum Allowed Load Faz
Reference letter	*D*	*H*	*W*	*L*	*MT*	*Fa,z*
Unit description		*mm*	*mm*	*mm*	*mm*	*N*
I190000012		51	51	50	19.30	100
I190000015		54	54	50	19.50	100
I190000018	DN 10	57	57	50	19.30	100
I190000022	DN 15	61	61	50	19.30	100
I190000028	DN 20	67	67	50	19.30	100
I190000035	DN 25	75	75	50	19.90	100
I190000042	DN 32	81	81	50	19.30	150
I190000048	DN 40	88	88	50	19.90	225
I190000054		100	100	50	23.00	225
I190000057		103	103	50	23.00	225
I190000060	DN 50	100	100	50	19.90	350
I190000064		115	115	50	25.30	350
I190000070		125	125	50	27.30	425
I190000076	DN 65	127	127	50	25.30	575
I190000089	DN 80	140	140	50	25.30	875
I190000102		152	152	50	25.30	1,000
I190000108		159	159	50	25.30	1,075
I190000114	DN 100	165	165	50	25.30	1,250
I190000133		192	192	100	29.50	1,475
I190000140	DN 125	192	192	100	26.20	1,950
I190000160		211	211	100	25.30	2,125
I190000168	DN 150	219	219	100	25.30	3,525
I190000219	DN 200	270	270	100	25.30	3,525
I190000356		407	407	100	25.30	3,525
I190000273	DN 250	324	324	100	25.30	3,525
I190000324	DN 300	375	375	100	25.30	3,525