Walraven dB-FiX® 80 Fixing Point Assembly Kit

(E0530)

for noise insulation fixing point

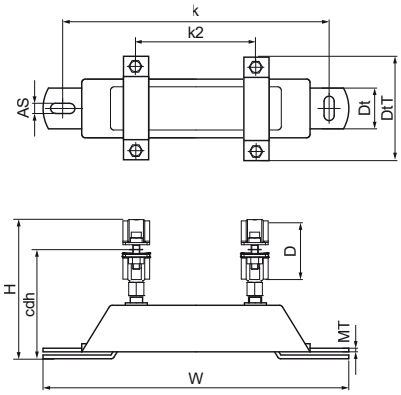

Features & benefits

- very stable
- material: steel
- zinc plated
- noise insulation by moulded EPDM rubber
- sound insulating lining according DIN 4109
- consists of: 1 fixing point assembly Walraven dB-FiX® 80 (Part No. 6693008), 2 heavy duty clamps HD500

Product Number	Total Height	Total Width	Total Depth	Clamp Center Distance Height	Depth	Anchoring Slot	Heart To Heart Distance	Heart To Heart Distance 2	Material Thickness	Thread Size	Maximum Allowed Load Faz	Maximum Allowed Load Fay
Reference letter	*H*	*W*	*DtT*	*cdh*	*Dt*	*AS*	*k*	*k 2*	*MT*	*TS*	*Fa,z*	*Fa,y*
Unit description	*mm*	*mm*	*mm*	*mm*	*mm*	*mm*	*mm*	*mm*	*mm*		*N*	*N*
2622020	128	290	85	109	30	20x10.5	250	100	3.00	M10	3,000	2,700
2622025	134	290	91	112	30	20x10.5	250	100	3.00	M10	3,000	2,700
2622032	143	290	102	116	30	20x10.5	250	100	3.00	M10	3,000	2,700
2622040	150	290	109	120	30	20x10.5	250	100	3.00	M10	3,000	2,700
2622050	163	290	122	126	30	20x10.5	250	100	3.00	M10	3,000	2,700
2622010	117	290	75	103	30	20x10.5	250	100	3.00	M10	3,000	2,700
2622015	121	290	78	105	30	20x10.5	250	100	3.00	M10	3,000	2,700