Walraven Cantilever Arm - U-shaped

(G1020)

fixing to wall or ceiling

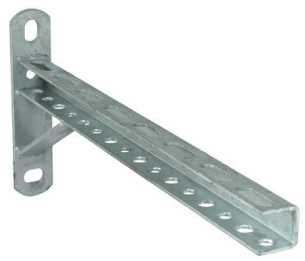

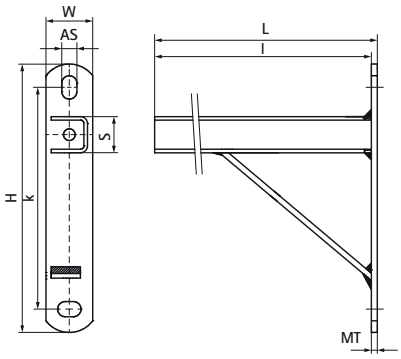

Features & benefits

- U-profile welded on wall plate
- anchoring slots at 90° to each other to simplify fixing
- fixing slots and holes available in the U-profile
- material: steel
- hot dip galvanized

Product Number	Type	Length	Total Height	Total Width	Total Length	Material Thickness	Anchoring Slot	Profile Opening	Heart To Heart Distance
Reference letter		*l*	*H*	*W*	*L*	*MT*	*AS*	*S*	*k*
Unit description		*mm*	*mm*	*mm*	*mm*	*mm*	*mm*	*mm*	*mm*
6601911	With prop	250	180	40	255	5.00	20x13	24	190
6601912	With prop	300	180	40	305	5.00	20x13	24	190
6601913	With prop	400	180	40	405	5.00	20x13	24	190
6601914	With prop	600	180	40	605	5.00	20x13	24	190
6601915	With prop	800	245	40	805	5.00	20x13	24	360
6601917	With prop	1,000	245	40	1,005	5.00	20x13	24	360