Walraven RapidRail® Wall Plate (Hinged)

(G1510)

adjustable base foot to connect fixing rails

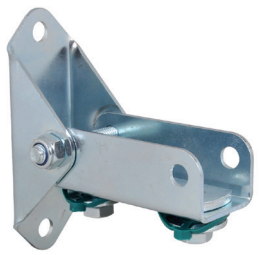

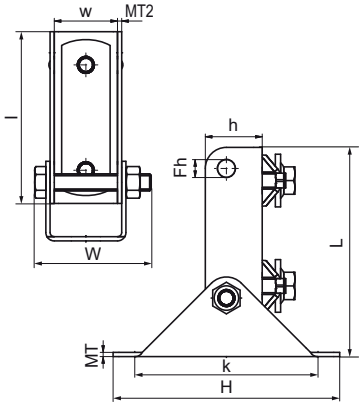

Features & benefits

- wall plate with hinging U-profile
- support with flexible angle to strengthen rail constructions
- for fixing of rail to sloping walls
- material: steel
- zinc plated

Product Number	For Rail Type	Total Height	Total Width	Total Length	Width	Height	Length	Heart To Heart Distance	Fixing Hole	Material Thickness	Material Thickness 2
Reference letter		*H*	*W*	*L*	*w*	*h*	*l*	*k*	*FH*	*MT*	*MT 2*
Unit description		*mm*	*mm*	*mm*	*mm*	*mm*	*mm*	*mm*	*mm*	*mm*	*mm*
6613250	27x18, 30x15, 30x20, 30x30, 30x45, 38x40	107	55.3	99.3	30	27	81.5	87	8.5	2.00	2