Walraven RapidStrut® Cantilever Arm (BUP1000)

(H0806)

fixing to wall, floor or ceiling

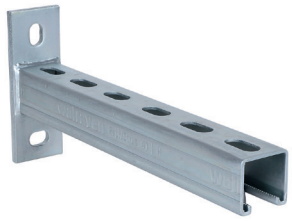

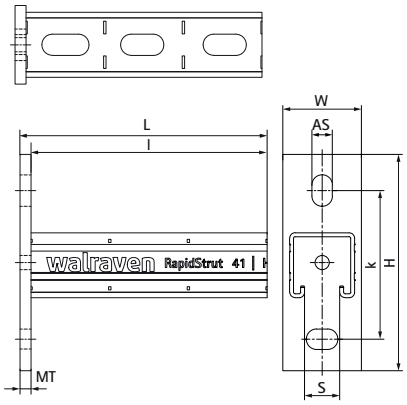

Features & benefits

- base plate with welded RapidStrut® Profile
- for quick and adjustable fixing of one or multiple pipes
- CO_2 welded
- with continuous perforation
- with sawing marks each 50 mm on all 3 sides of the profile
- well balanced relation between base plate and profile for optimal use of load performance
- material: profiles made of steel 1.0038 (S235JR)
- material: base plate type 21 H made of steel 1.0044 (S275JR)
- material: base plate type 41 M and H made of steel 1.0045 (S355JR)
- product is part of the Walraven Walraven UltraProtect® 1000 system
- suitable for in- and outdoor applications
- stands min. 1,000 hours salt spray test (max. 5% red rust) according to ISO 9227
- Walraven RapidStrut® type 41 H and above tested for fire safety according to EN 1366-1
- for more information about the max. allowed load (Faz) please refer to the loading tables or our online datasheet 'Walraven RapidStrut® Data Sheet'

Product Number	Type	Length	Total Height	Total Width	Total Length	Material Thickness	Anchoring Slot	Profile Opening	Heart To Heart Distance
Reference letter		*l*	*H*	*W*	*L*	*MT*	*AS*	*S*	*k*
Unit description		*mm*	*mm*	*mm*	*mm*	*mm*	*mm*	*mm*	*mm*
66082120	21 | H	205	110	50	205	5.00	18x11	22	70
66082130	21 | H	300	110	50	305	5.00	18x11	22	70
66082145	21 | H	450	110	50	455	5.00	18x11	22	70
66082160	21 | H	600	110	50	605	5.00	18x11	22	70
66084030	41 | M	300	137.5	50	307	7.00	20x13	22	95
66084045	41 | M	450	137.5	50	457	7.00	20x13	22	95
66084060	41 | M	600	137.5	50	607	7.00	20x13	22	95
66084115	41 | H	150	137.5	50	157	7.00	20x13	22	95
66084120	41 | H	200	137.5	50	207	7.00	20x13	22	95
66084130	41 | H	300	137.5	50	307	7.00	20x13	22	95
66084140	41 | H	400	137.5	50	407	7.00	20x13	22	95
66084145	41 | H	450	137.5	50	457	7.00	20x13	22	95
66084150	41 | H	500	137.5	50	507	7.00	20x13	22	95
66084160	41 | H	600	137.5	50	607	7.00	20x13	22	95
66084175	41 | H	750	137.5	50	757	7.00	20x13	22	95
66084198	41 | H	1,000	137.5	50	1,007	7.00	20x13	22	95
66084199	41 | H	1,200	137.5	50	1,207	7.00	20x13	22	95