Walraven RapidStrut® Slide Nut G2 (BUP1000)

(H2404)

for quick connection of clamps and threaded rods

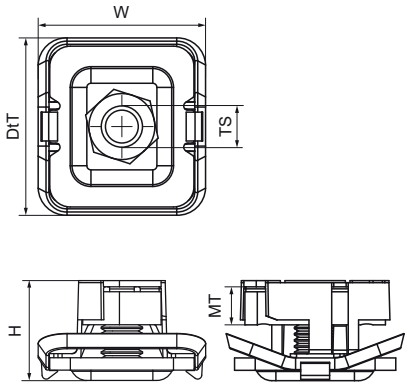

Features & benefits

- slide nut with washer and Walraven RapidStrut® spring
- ready-to-use pre-assembled for a quick fixing, and retains assembly in place before final tightening
- material: metal parts made of steel 1.0332; spring(s) made of POM (polyoxymethylene), green
- product is part of the Walraven Walraven UltraProtect® 1000 system
- suitable for in- and outdoor applications
- stands min. 1,000 hours salt spray test (max. 5% red rust) according to ISO 9227
- Tested values in combination with Walraven RapidStrut® Rail 41x41x2.5mm, more details can be found on the Technical Datasheet.
- M10 and M12 are tested for fire safety according to EN 1366-1.

Product Number	For Rail Type	Thread Size	Material Thickness	Torque Moment For Installation	Maximum Allowed Load Fax	Maximum Allowed Load Faz	Total Height	Total Width	Total Depth
Reference letter		*TS*	*MT*	*T inst.*	*Fa,x*	*Fa,z*	*H*	*W*	*DtT*
Unit description			*mm*	*Nm*	*N*	*N*	*mm*	*mm*	*mm*
665185108	41x21, 41x41, 41x51, 41x62, 41x82	M8	6.00	11	1,100	3,120	24.29	43.22	40.8
665185110	41x21, 41x41, 41x51, 41x62, 41x82	M10	8.00	15	1,250	5,000	24.29	43.22	40.8
665185112	41x21, 41x41, 41x51, 41x62, 41x82	M12	9.00	22	2,440	5,000	24.29	43.22	40.8
665185106	41x21, 41x41, 41x51, 41x62, 41x82	M6	5.00	7	950	2,660	24.29	43.22	40.8