Walraven RapidStrut® Slide Nut MS (BUP1000)

(H2409)

for quick connection of clamps and threaded rods

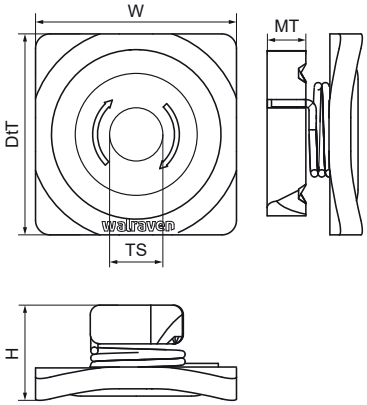

Features & benefits

- slide nut with washer and metal spring
- ready-to-use pre-assembled for a quick fixing, and retains assembly in place before final tightening
- solid washer for strong connection
- robust since completely made from metal
- material: steel
- product is part of the Walraven Walraven UltraProtect® 1000 system
- suitable for in- and outdoor applications
- stands min. 1,000 hours salt spray test (max. 5% red rust) according to ISO 9227
- Tested values in combination with Walraven RapidStrut® Rail 41x41x2.5mm.|More details can be found on the Technical Datasheet.

Product Number	For Rail Type	Thread Size	Material Thickness	Torque Moment For Installation	Maximum Allowed Load Fax	Maximum Allowed Load Faz	Total Height	Total Width	Total Depth
Reference letter		*TS*	*MT*	*T inst.*	*Fa,x*	*Fa,z*	*H*	*W*	*DtT*
Unit description			*mm*	*Nm*	*N*	*N*	*mm*	*mm*	*mm*
66518308	41x21, 41x41, 41x51, 41x62, 41x82	M8	8.00	25	1,450	4,450	20	43	43
66518310	41x21, 41x41, 41x51, 41x62, 41x82	M10	10.00	30	1,810	5,000	20	43	43
66518312	41x21, 41x41, 41x51, 41x62, 41x82	M12	10.00	40	2,790	5,000	20	43	43