Walraven RapidStrut® Cross Connector G2 (BUP1000)

(H28134)

to make Strut rail fabrications

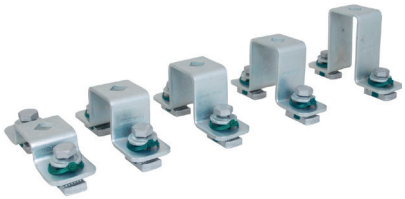

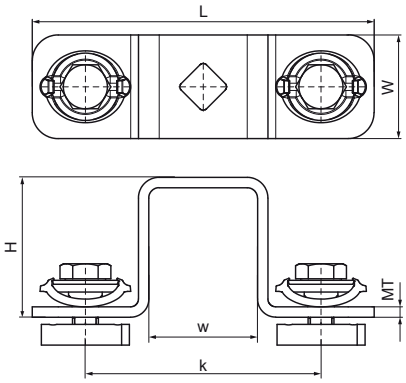

Features & benefits

- connector with pre-assembled Walraven RapidStrut® Slide nut(s)
- to make fabrication with Walraven RapidStrut® Rail
- ready-to-use pre-assembled for a quick fixing, and retains assembly in place before final tightening
- 'Direct Twist' technology for easy and secure installation
- visual guide to check the position of the slide nut
- optimized for easy installation with electrical tools
- material: metal parts made of steel 1.0332; spring(s) made of POM (polyoxymethylene), green
- product is part of the Walraven Walraven UltraProtect® 1000 system
- suitable for in- and outdoor applications
- stands min. 1,000 hours salt spray test (max. 5% red rust) according to ISO 9227

Product Number	For Rail Type	Total Height	Total Width	Total Length	Material Thickness	Width	Torque Moment For Installation	Maximum Allowed Load Faz	Maximum Allowed Load Fax
Reference letter		*H*	*W*	*L*	*MT*	*w*	*T inst.*	*Fa,z*	*Fa,x*
Unit description		*mm*	*mm*	*mm*	*mm*	*mm*	*Nm*	*N*	*N*
665885402	41x21	34.75	40	132	4.00	40	40	8,420	4,380
665885404	41x41	54.75	40	132	4.00	40	40	8,420	4,380
665885405	41x51	64.75	40	132	4.00	40	40	8,420	4,380
665885406	41x62	74.75	40	132	4.00	40	40	8,420	4,380
665885408	41x82	94.75	40	132	4.00	40	40	8,420	4,380