Walraven RapidStrut® Rail Connector 135° G2 (BUP1000)

(H2854)

to make Strut rail fabrications

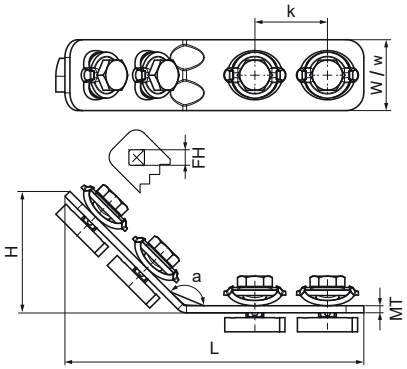

Features & benefits

- connector with pre-assembled Walraven RapidStrut® Slide nut(s)
- to make fabrication with Walraven RapidStrut® Rail
- ready-to-use pre-assembled for a quick fixing, and retains assembly in place before final tightening
- 'Direct Twist' technology for easy and secure installation
- visual guide to check the position of the slide nut
- optimized for easy installation with electrical tools
- material: metal parts made of steel 1.0332; spring(s) made of POM (polyoxymethylene), green
- product is part of the Walraven Walraven UltraProtect® 1000 system
- suitable for in- and outdoor applications
- stands min. 1,000 hours salt spray test (max. 5% red rust) according to ISO 9227

Product Number	For Rail Type	Angle	Total Height	Total Width	Total Length	Material Thickness	Width	Fixing Hole	Heart To Heart Distance
Reference letter		*a*	*H*	*W*	*L*	*MT*	*w*	*FH*	*k*
Unit description		*°*	*mm*	*mm*	*mm*	*mm*	*mm*	*mm*	*mm*
665885235	41x21, 41x41, 41x51, 41x62, 41x82	135	83.4	40	173.6	4.00	40	13.8	41
665885330	41x21, 41x41, 41x51, 41x62, 41x82	135	50.3	40	139.8	4.00	40	13.8	41