Walraven RapidStrut® Angle Connector 45° (BUP1000) *(H2868)*

to make Strut rail fabrications

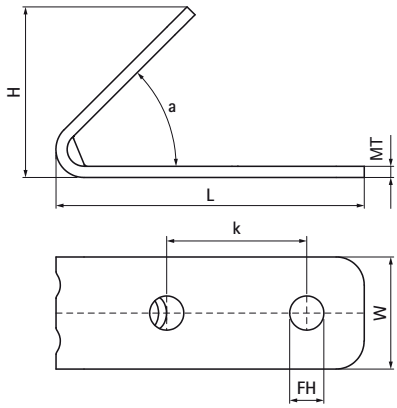

Features & benefits

- angle connector for all Walraven RapidStrut® rails to make fabrications
- the hole pattern is adapted to the hole pattern of Walraven RapidStrut® rails to use throughbolts
- user friendly by rounded edges
- with reinforced bend for extra strength
- material: steel 1.0242 (S250GD) + ZM310 MAC
- product is part of the Walraven Walraven UltraProtect® 1000 system
- suitable for in- and outdoor applications
- stands min. 1,000 hours salt spray test (max. 5% red rust) according to ISO 9227

Product Number	For Rail Type	Angle	Total Height	Total Width	Total Length	Material Thickness	Width	Fixing Hole	Heart To Heart Distance	Torque Moment For Installation
Reference letter		*a*	*H*	*W*	*L*	*MT*	*w*	*FH*	*k*	*T inst.*
Unit description		*°*	*mm*	*mm*	*mm*	*mm*	*mm*	*mm*	*mm*	*Nm*
66588270	41x21, 41x41, 41x51, 41x62, 41x82	45	60.9	40	110	4.00	40	12.2	50	30