Walraven RapidStrut® PVC Profile

(H3915)

finishing of Strut Rail

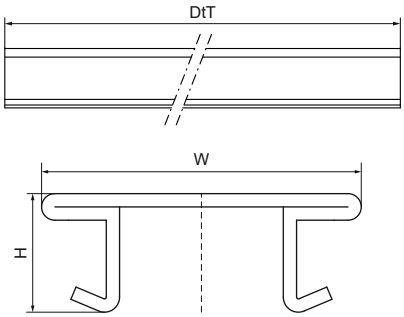

Features & benefits

- closing strip for rail
- reduces the risk or dirt / moisture ingress
- aesthetic finish
- simplifies cleaning / maintenance
- material: PVC (polyvinylchloride), white

Product Number	For Rail Type	Total Height	Total Width	Total Depth
Reference letter		*H*	*W*	*DtT*
Unit description		*mm*	*mm*	*mm*
6566999	41x21, 41x41, 41x51, 41x62, 41x82	10	38	3,000