Walraven Yeti® 335 Support System

(I0410)

for Rooftop Installations

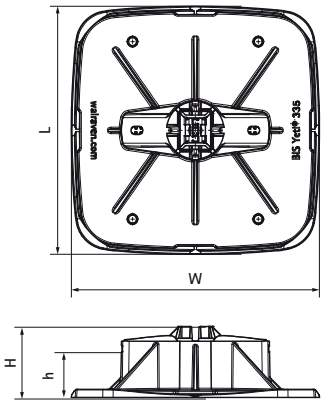

Features & benefits

- modular supporting system for HVAC equipment, solar panels, walkways, pipe work, cable runs, etc.
- for flat roofs
- for horizontal and vertical applications
- 360° rotatable insert for Walraven RapidStrut® 41x41 or Walraven RapidStrut® DS 5 (41x52 mm)
- with non-slip anti-vibration mat
- mouldings made of WPC, a composite of recycled plastic and wood fibre
- resistant to UV and chemical influences
- noise reduction according to DIN EN ISO 10140-1 and DIN EN ISO 10140-3 up to 31 dB(A)
- UV-resistance according to EN ISO 16474-3:2014-02 - certified by ITB
- For a detailed calculation and for support how to spread the load please contact Walraven Technical Support.
- In cases where a foot is used in roof applications, the installer is obliged to verify maximum load capacity of roof before installation.

Product Number	Model	Total Width	Total Length	Total Height	Height
Reference letter		*W*	*L*	*H*	*h*
Unit description		*mm*	*mm*	*mm*	*mm*
67685201	Horizontal / Vertical	335	335	96	12.5
67685302	H-Set without rail	335	335	96	12.5