Walraven Britclips® ACC25

(J3510)

for ceiling grid

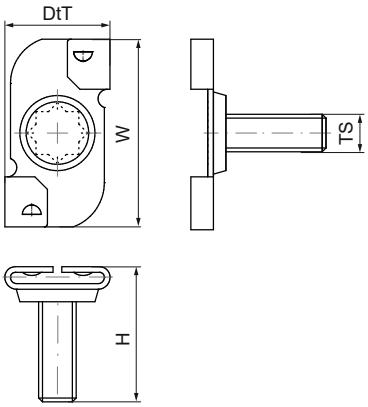

Features & benefits

- twist on fixing
- for fixing to the ceiling grid
- with stud bolt M6 (length see table) for fixing of clamp, conduit junction box, etc.
- material: spring steel (type CS70)

Product Number	Total Height	Total Width	Total Depth
Reference letter	*H*	*W*	*DtT*
Unit description	*mm*	*mm*	*mm*
56521101	17	45	27
56521601	22	45	27
56522501	31	45	27