Walraven Britclips® Wedge Nut

(J4530)

for composite flooring systems

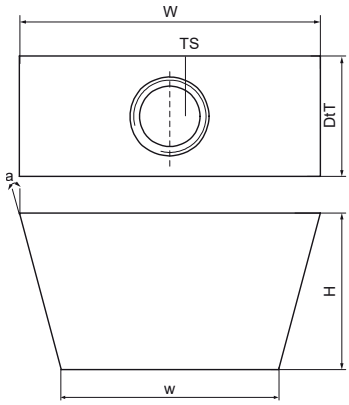

Features & benefits

- for fixing to composite flooring systems
- with thread connector
- material: steel
- zinc plated

Product Number	Thread Size	Width	Total Height	Total Width	Total Depth	Angle	Maximum Allowed Load Faz
Reference letter	*TS*	*w*	*H*	*W*	*DtT*	*a*	*Fa,z*
Unit description		*mm*	*mm*	*mm*	*mm*	*°*	*N*
6213006	M6	18	12	25	12	15	1,200
6213008	M8	18	12	25	12	15	1,690
6213010	M10	18	12	25	12	15	2,050
6213106	M6	16.7	10	21	13	11.5	1,200
6213108	M8	16.7	10	21	13	11.5	1,690
6213110	M10	16.7	10	21	13	11.5	2,250
6213208	M8	9.1	10	19	10	23.5	1,690
6213408	M8	13.7	9.5	19	9.5	14	1,690