Walraven Wall Plate Resistance Welded (BUP1000)

(K1511)

fixing to wall or ceiling

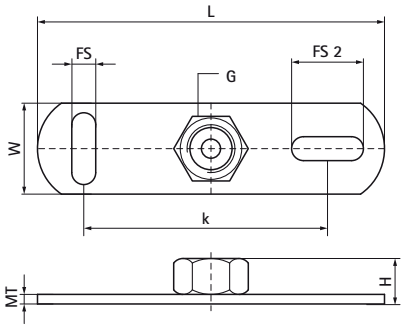

Features & benefits

- fixings to ceiling or floor (only tension loads recommended)
- slots at 90° to each other to simplify fixing
- with resistance welded connection nut
- material: steel
- product is part of the Walraven UltraProtect® 1000 system
- suitable for in- and outdoor applications
- stands min. 1,000 hours salt spray test (max. 5% red rust) according to ISO 9227

Product Number	Connection Thread	Total Length	Total Width	Total Height	Material Thickness	Fixing Slot	Fixing Slot 2	Heart To Heart Distance	Maximum Allowed Load Faz
Reference letter	*G*	*L*	*W*	*H*	*MT*	*FS*	*FS 2*	*k*	*Fa,z*
Unit description		*mm*	*mm*	*mm*	*mm*	*mm*	*mm*	*mm*	*N*
6708008	M8	80	25	12	3.00	15x8,5	15x8,5	50	2,500
6708010	M10	80	25	14	3.00	15x8,5	15x8,5	50	2,500