Walraven Hexagon Thread Adaptor

(K5531)

adjustment of thread connection

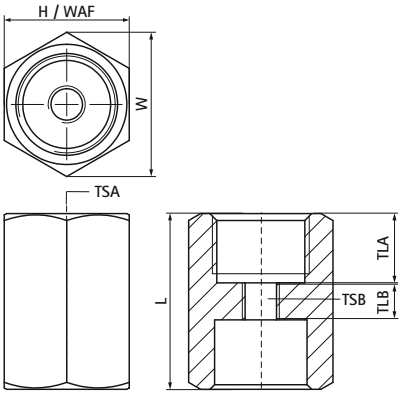

Features & benefits

- easy installation, even with a hexagon nut, which is fully covered by the adaptor
- the smart design prevents conflicts between threaded rod and 1/2" threaded tube
- time reduced installation in combination with 1/2" threaded tubes and clamps
- max. tightening torque defined by the used anchoring product
- material: steel
- zinc plated

Product Number	Thread Gender A	Thread Size A	Thread Length A	Thread Gender B	Thread Size B	Thread Length B	Width Across Flats	Total Height	Total Width	Total Length	Maximum Allowed Load Faz
Reference letter	*TGA*	*TSA*	*TLA*	*TGB*	*TSB*	*TLB*	*WAF*	*H*	*W*	*L*	*Fa,z*
Unit description			*mm*			*mm*	*mm*	*mm*	*mm*	*mm*	*N*
64599838	Female thread	G½"	13	Female thread	M8	8	27	27	31	38	5,600
64599938	Female thread	G½"	13	Female thread	M10	8	27	27	31	38	12,500