Walraven WTB1 Throughbolt Anchor

(L0340)

high performance corrosion resistant expansion anchor for cracked concrete

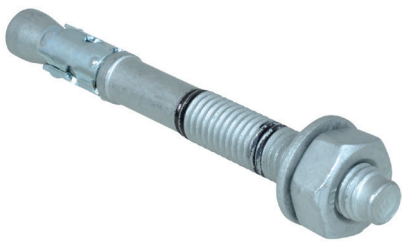

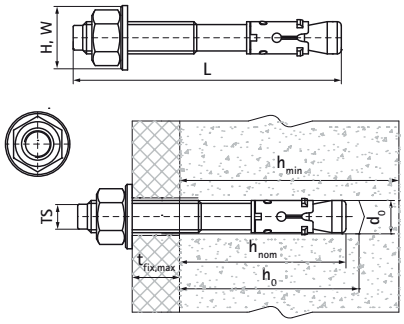

Features & benefits

- high load capacity
- pre- and through-fixing
- two embedment depths provide installation flexibility
- zinc-flake coated for improved corrosion resistance
- material: steel
- zinc plated with zinc flake
- ETA Option 1 approval for cracked and non-cracked concrete
- fire resistance class R30-R120 for design of anchorages under exposure to fire
- substrate type: cracked concrete, non-cracked concrete, stone
- for loads and more information, refer to the product data sheet and/or the ETA report

Product Number	Thread Size	Total Length	Drill Hole Diameter	Drill Hole Depth	Minimum Substrate Thickness	Maximum Fixture Thickness	Standard Embedment Depth	Recommended Load In Cracked Concrete C20/25	Recommended Load In Uncracked Concrete C20/25	Total Height	Total Width
Reference letter	*TS*	*L*	*d0*	*h0*	*hmin*	*tfix,max*	*hnom*			*H*	*W*
Unit description		*mm*	*mm*	*mm*	*mm*	*mm*	*mm*	*N*	*N*	*mm*	*mm*
609831080	M8	80	8	55	100	15	55	1,980	3,570	13	13
609831081	M8	100	8	55	100	35	55	1,980	3,570	13	13
609831082	M8	115	8	55	100	50	55	1,980	3,570	13	13
609831100	M10	95	10	69	120	15	69	4,290	5,710	17	17
609831101	M10	115	10	69	120	35	69	4,290	5,710	17	17
609831102	M10	130	10	69	120	50	69	4,290	5,710	17	17
609831120	M12	120	12	80	140	25	80	5,710	9,520	19	19
609831121	M12	135	12	80	140	40	80	5,710	9,520	19	19
609831160	M16	140	16	100	170	20	100	9,520	16,670	24	24