Walraven WTB7 Throughbolt Anchor

(L0345)

high performance expansion anchor for non-cracked concrete

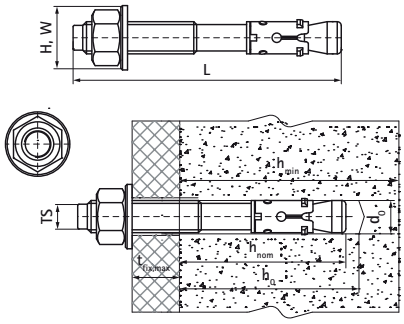

Features & benefits

- high load capacity
- pre- and through-fixing
- two embedment depths provide installation flexibility
- material: steel
- zinc plated
- ETA Option 7 approval for non-cracked concrete
- substrate type:non-cracked concrete, stone
- for loads and more information, refer to the product data sheet and/or the ETA report

Product Number	Thread Size	Total Length	Drill Hole Diameter	Drill Hole Depth	Minimum Substrate Thickness	Maximum Fixture Thickness	Standard Embedment Depth	Recommended Load In Uncracked Concrete C20/25	Total Height	Total Width
Reference letter	*TS*	*L*	*d0*	*h0*	*hmin*	*tfix,max*	*hnom*		*H*	*W*
Unit description		*mm*	*mm*	*mm*	*mm*	*mm*	*mm*	*N*	*mm*	*mm*
609837080	M8	75	8	55	100	10	55	4,760	15	15
609837081	M8	95	8	55	100	30	55	4,760	15	15
609837082	M8	115	8	55	100	50	55	4,760	15	15
609837100	M10	95	10	59	100	25	59	4,760	19	19
609837101	M10	115	10	59	100	45	59	4,760	19	19
609837102	M10	130	10	59	100	60	59	4,760	19	19
609837120	M12	100	12	80	136	5	80	9,920	21	21
609837121	M12	120	12	80	136	25	80	9,920	21	21
609837122	M12	150	12	80	136	55	80	9,920	21	21
609837123	M12	180	12	80	136	85	80	9,920	21	21
609837160	M16	150	16	100	170	30	100	15,710	26	26