Walraven HK

(L0560)

fixing to concrete, brick

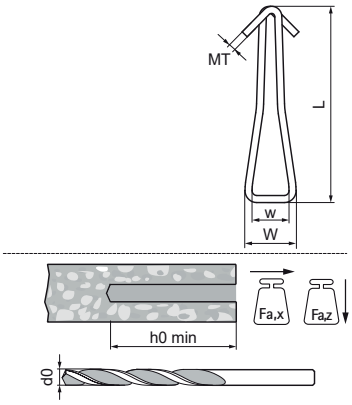

Features & benefits

- for fixing of steel wire, suspension band or chain in concrete and solid stone
- for suspension of static loads such as air ducts, lowered ceilings, etc. to concrete
- also suitable for outside use
- better fire resistance than plastic plugs
- tested by CSTB, test report EPOD/06-05 (HK)
- max. allowed load (Fa) in concrete (350 kg/m3) with safety factor 1:4, drill hole Ø 8 mm and hammer in HK wire anchor
- material: stainless steel A4 (1.4401/ AISI 316)

Product Number	Model	Material Thickness	Drill Hole Diameter	Min. Drill Hole Depth	Width	Total Height	Total Width	Total Length	Maximum Allowed Load Faz	Maximum Allowed Load Fax
Reference letter		*MT*	*d0*	*h0 min*	*w*	*H*	*W*	*L*	*Fa,z*	*Fa,x*
Unit description		*mm*	*mm*	*mm*	*mm*	*mm*	*mm*	*mm*	*N*	*N*
61073134	Without cap	2.00	8	30	9	5	15	50	800	800
61073224	With cap	2.00	8	30	9	20	25	50	800	800