Walraven Rosette

(02005)

finishing of pipe apertures

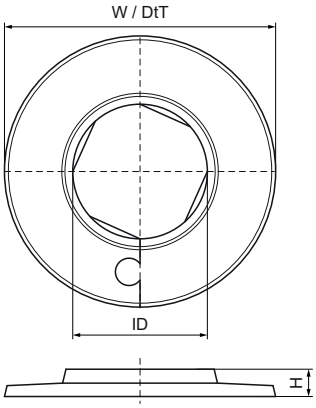

Features & benefits

- one-part rosette
- for finishing of pipe apertures
- material: PP (polypropylene), white (according to RAL 9016)

Product Number	Inner Diameter	Total Height	Total Width	Total Depth
Reference letter	*ID*	*H*	*W*	*DtT*
Unit description	*mm*	*mm*	*mm*	*mm*
0671412	12	12	50	50
0671415	15	12	55	55
0671418	18	12	55	55
0671422	22	12	55	55
0671428	28	12	55	55
0671435	35	12	65	65