Walraven Double Rosette

(02010)

finishing of pipe apertures

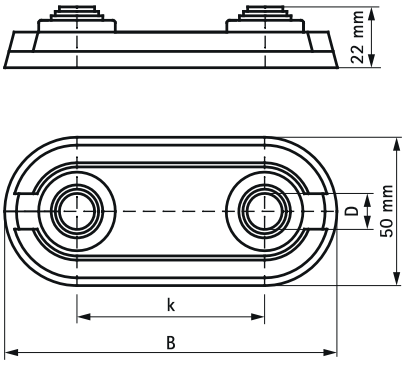

Features & benefits

- for finishing of pipe apertures
- Part No. 06721XX: for copper or metal pipes (Ø 12, 15, 18 or 20 mm)
- Part No. 06722XX: for plastic or multilayer pipe (Ø 14, 16, 17 or 20 mm)
- both parts are securely connected
- no damage to corrugated sheet (suitable for every thickness)
- material: ABS, white (according to RAL 9010)

Product Number	Total Height	Total Width	Total Depth	Heart To Heart Distance
Reference letter	*H*	*W*	*DtT*	*k*
Unit description	*mm*	*mm*	*mm*	*mm*
0672150	22	50	100	50
0672235	22	50	85	35
0672250	22	50	100	50