Walraven Britclips® Universal Beam Clip M6 x 8

(J10110)

for flange

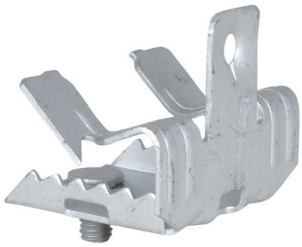

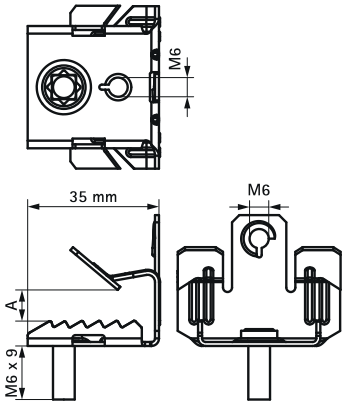

Features & benefits

- for a solid fixing under flanges without welding or drilling
- suitable for horizontal and vertical flanges
- with stud bolt M6 x 8 mm for fixing of clamp, conduit junction box, etc.
- material: spring steel (type CS70)
- surface treatment: Delta-Tone 9000 (480 hours)

Product Number	Code	Flange	Thread Size	Thread Type	Stud Length	Total Width x Total Height x Total Depth	Maximum Allowed Load Faz
Reference letter		*Fl*	*TS*	*TT*	*Lp*	*W x H x DtT*	*Fa,z*
Unit description		*mm*			*mm*	*mm x mm x mm*	*N*
EM51520607	H2-4S	3-7	M6	Metric	8	44.5 x 23 x 37.5	450
EM51520613	H5-8S	8-12.5	M6	Metric	8	44.5 x 28 x 37.5	450
EM51520620	H9-12S	14-20	M6	Metric	8	44.5 x 44 x 37.5	450